Rice Lake Stationary Livestock Scale

MAS-LC

Installation Manual

RICE LAKE®
WEIGHING SYSTEMS
To be the best by every measure®

Jamieson Equipment Company
www.jamiesonequipment.com
toll free 800.875.0280

Contents

1.0 Introduction

Congratulations on your purchase of the *Stationary Livestock Scale (MAS-LC)*. This system is manufactured with top quality components and is engineered using the latest technology to provide operating features and reliability unmatched for years to come.

The *MAS-LC* provides reliable, accurate weighing for ranchers and processors that prefer a load cell based weighing system. This scale combines the accuracy of fully electronic weighing technology with steel I-beam weigh bridge designs typically found in heavy capacity vehicle weighing scales.

Please take the time to read this manual completely through before attempting to install the system. Although the *MAS-LC* has been designed for easy set up and use, a thorough understanding of this manual will ensure that you receive the maximum benefit from the system.

Please contact Rice Lake Weighing Systems at 800-472-6703 with any questions or comments.

This manual along with other documentation associated with the *Stationary Livestock Scale (MAS-LC)* can be found on the Rice Lake Weighing Systems website at www.ricelake.com.

1.1 Safety

Safety Symbol Definitions:

DANGER *Indicates an imminently hazardous situation that, if not avoided, will result in death or serious injury.*

WARNING *Indicates a potentially hazardous situation that, if not avoided, could result in serious injury or death, and includes hazards that are exposed when guards are removed.*

CAUTION *Indicates a potentially hazardous situation that, if not avoided, may result in minor or moderate injury.*

Important *Indicates information about procedures that, if not observed, could result in damage to equipment or corruption to and loss of data.*

General Safety

Do not operate or work on this equipment unless you have read and understood the instructions and warnings in this manual. Failure to follow the instructions or heed the warnings could result in injury or death. Contact any Rice Lake Weighing Systems dealer for replacement manuals. Proper care is your responsibility.

WARNING

Failure to heed may result in serious injury or death.

DO NOT allow minors (children) or inexperienced persons to operate this unit.
DO NOT operate without all shields and guards in place.
DO NOT use for purposes other than weighing.
DO NOT place fingers into slots or possible pinch points.
DO NOT place hands, feet or any body part underneath the scale at any time. The scale could be lowered at any time, crushing body parts.
DO NOT use any load bearing component that is worn beyond 5% of the original dimension.
DO NOT use this product if any of the components are cracked.
DO NOT exceed the rated load limit of the unit.
DO NOT make alterations or modifications to the unit.
DO NOT remove or obscure warning labels.
Keep hands, feet and loose clothing away from moving parts.

Be sure the gates are latched or tied inward before transporting the scale.

Animal Safety:

Animal safety is a very serious issue and must be observed when handling any type of animal.

The scale surface may become slippery during use; a build-up of manure on the scale may reduce traction. It is recommended that you take any necessary precautions to maintain an acceptable level of animal footing.

Calibration:

Do not calibrate this scale with a weight cart having a gross weight in excess of 25% of the total capacity of the scale. This device is designed to be calibrated with single block weights spread evenly throughout the floor of the scale. If using a test cart, use 3/4" plywood for testing and calibration. This will minimize the damage to the X-lug floor. Shift tests should not be done with more than 4,000 lb or 1,815 kg in a 4' x 4' area. Failure to comply with this warning will result in damage to the scale and void the warranty.

1.1.1 Safety Decals

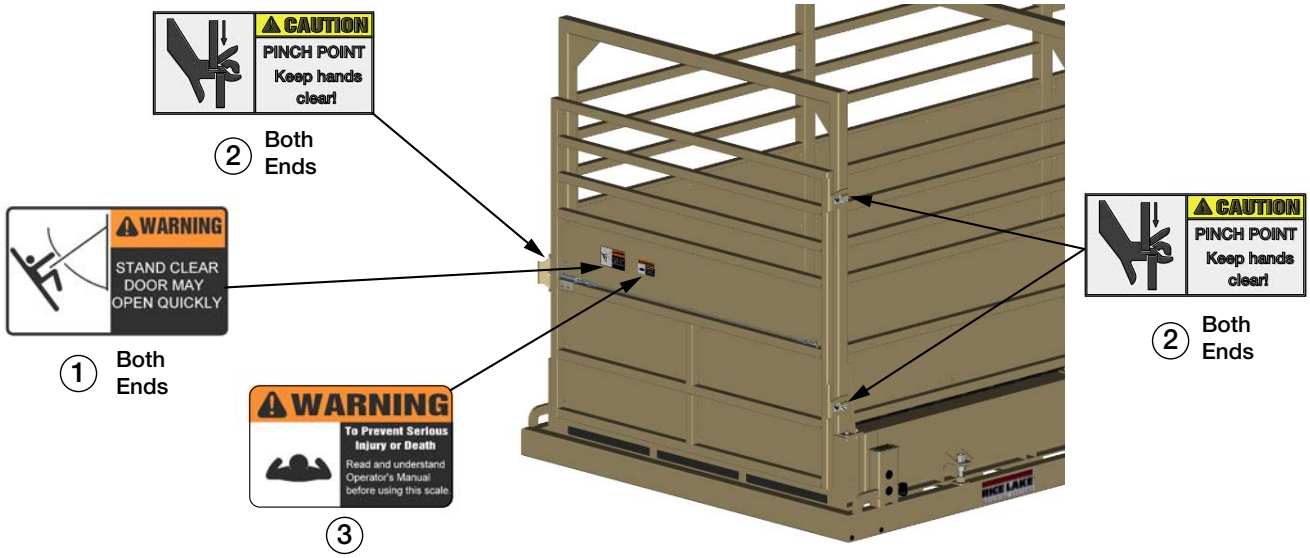

Figure 1-1. Safety Decals

Item #	Part #	Description	Qty
1	151902	Warning, Opens Quickly	2
2	151909	Caution, Pinch Point	6
3	151908	Read Manual	1

1.2 Overview

The *MAS-LC* animal scale shown in Figure 1-2 consists of a sheeted animal cage suspended by four S-type load cells on top of a stationary base frame. When transporting, the scale system is locked down using overload bolts, protecting the load cells from damage during transport. A digital indicator can be connected to the scale to display the weight.

The *MAS-LC* animal scale can be used on any firm surface that is straight, plumb and level.

Note ***Legal for Trade applications often require a concrete slab foundation. Check with the local Weights and Measure officials in the area.***

Figure 1-2. Rice Lake Stationary Livestock Scale

1.3 Lifting and Unloading Instructions

Lift the scale using the D-rings (see Figure 1-3), the supplied lifting bands, four lifting straps or chains with safety latch hooks and a crane or loader. **Ensure the overload stop bolts are in the transport mode** (locked down – see Section 1.3.1) when loading and transporting the scale.

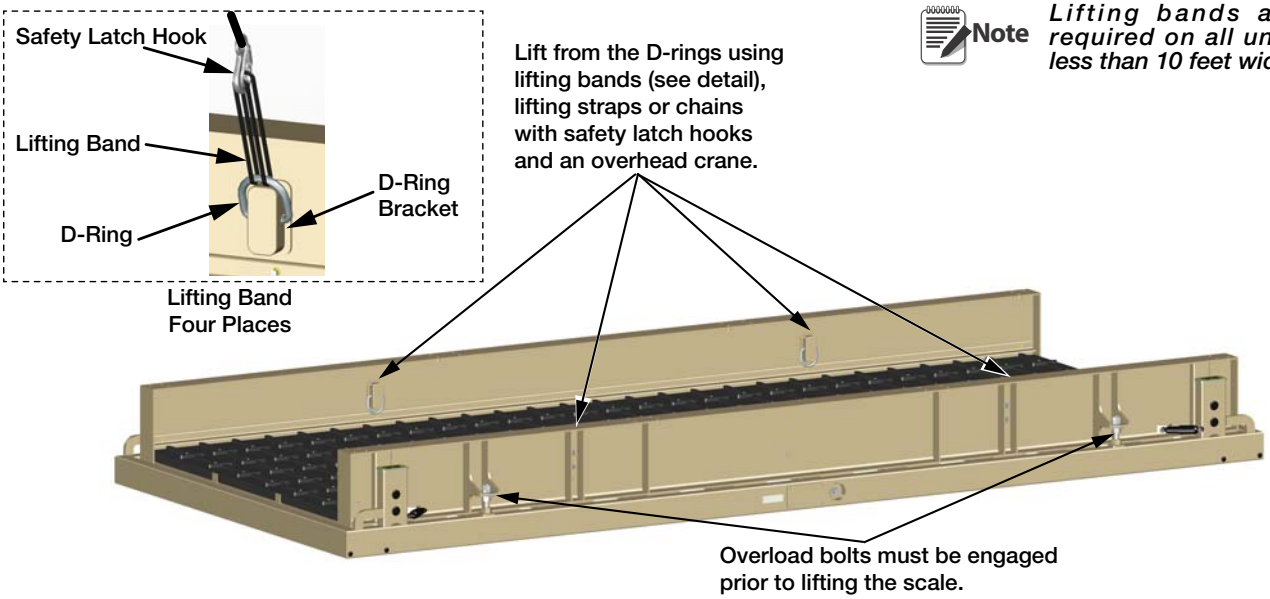

Figure 1-3. Lift Points

1.3.1 Lift the Scale

1. Lift the scale using adequate lifting straps and device.
2. Place on a prepared location — a firm surface that is straight, plumb and level. Store scale on the same type of surface.

DANGER *The unit is very heavy. Ensure that adequate straps are used for lifting the scale and that straps are in the proper location. See Table 1-1 for strap lengths.*

Ensure no one is under the scale when lifting and moving into the location selected.

CAUTION *Lifting bands on the D-rings (see Figure 1-3) are to be used only for unloading the scale from the truck. Ensure the lifting device safety latch hooks are securely through both end of the bands before attempting to lift. Once the scale is in place, the bands must be removed from the D-ring and discarded.*

Model	Minimum Strap Length
13 x 8	8 ft
15 x 8	9 ft
17 x 8	9.5 ft
19 x 8	10.5 ft
22 x 8	12 ft
22 x 10	13 ft

Table 1-1. Minimum Strap Length for Lifting

1.3.2 Package Removal

The indicator is shrink wrapped for transportation. Be careful when removing to avoid damaging the scale.

Note *Please recycle the packaging material.*

Place the parts safely and in a location they will not be damaged.

2.0 Installation

2.1 Permanent Installation

Assembly of the *MAS-LC* at its permanent location is recommended. As with any weighing equipment, the accuracy of the scale is dependent on the installation. In all installations, the scale must be level to ensure proper operation.

Rice Lake Weighing Systems recommends a concrete foundation (piles or piers) for permanent installations. The foundation must be able to support the gross weight of the scale (scale dead weight plus scale capacity), and the piles or piers must be situated directly under the load cell stands. The foundation must not be subject to distortion or motion due to frost action. A qualified local professional should be consulted to recommend the proper size of foundation for the location. Foundation dimensional requirements are available from the dealer or Rice Lake Weighing Systems. Requirements may vary from one Weights and Measures jurisdiction to another, please contact the local office.

2.1.1 Installation

1. Place base frame on a firm surface that is straight, plumb and level.
2. Remove overload bolts.

Note *Concrete drawings are available upon request.*

Important *Retain overload bolts and nuts during load cell replacement and/or future relocation of the scale.*

Base of scale must be set on a firm level surface.

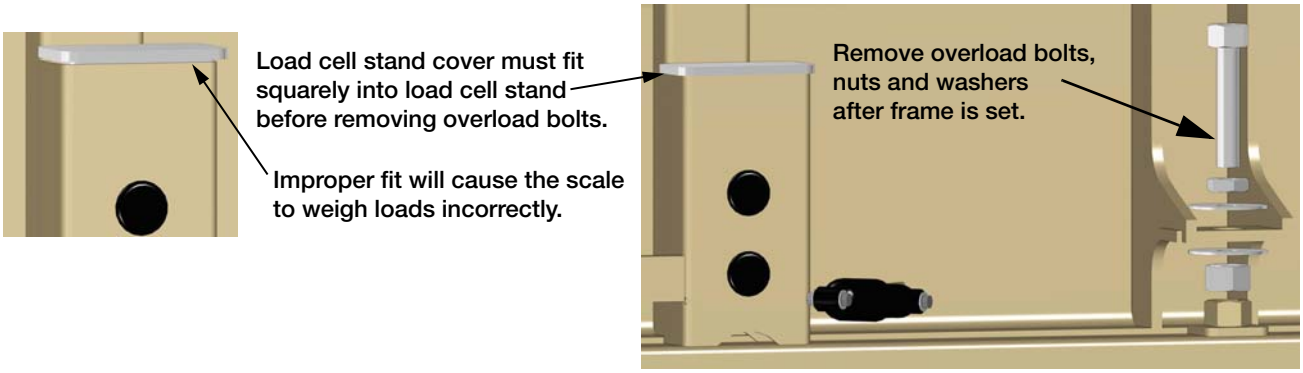

Figure 2-1. Scale Base Frame and Overload Bolts

Important *Do not tighten hardware at this time, it will need to be loose to allow for wall panel installation. Upright and wall installation should be done with two people or an overhead crane.*

3. Install the two internal upright assemblies and the two gate upright assemblies to the base frame using the hardware provided. See Figure 2-2.

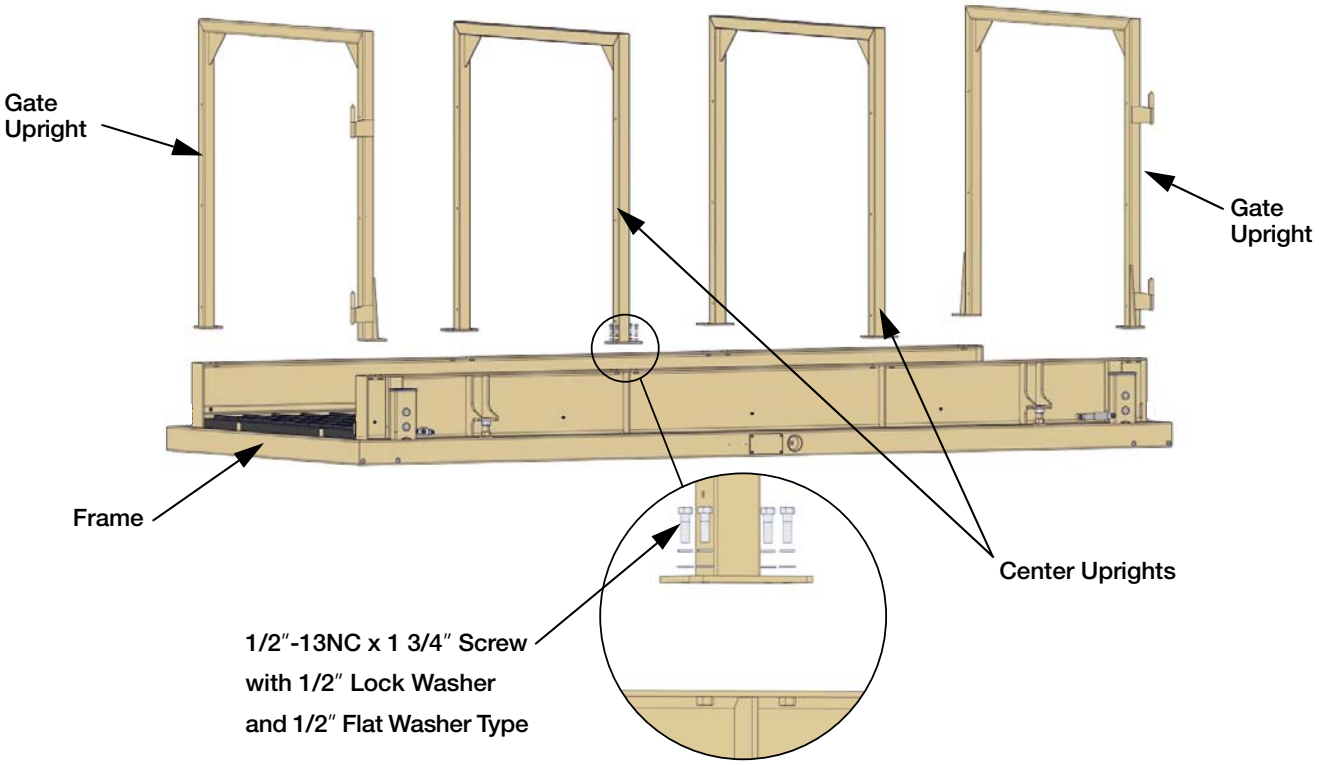

Figure 2-2. Install Internal Overhead Assemblies

4. Align holes in wall panels with holes in uprights and secure in place with provided hardware.
5. Tighten hardware for the wall panels then tighten hardware securing the uprights to the frame.

Important ***At center uprights, hardware will go through two wall panels (one on each side of the upright).***

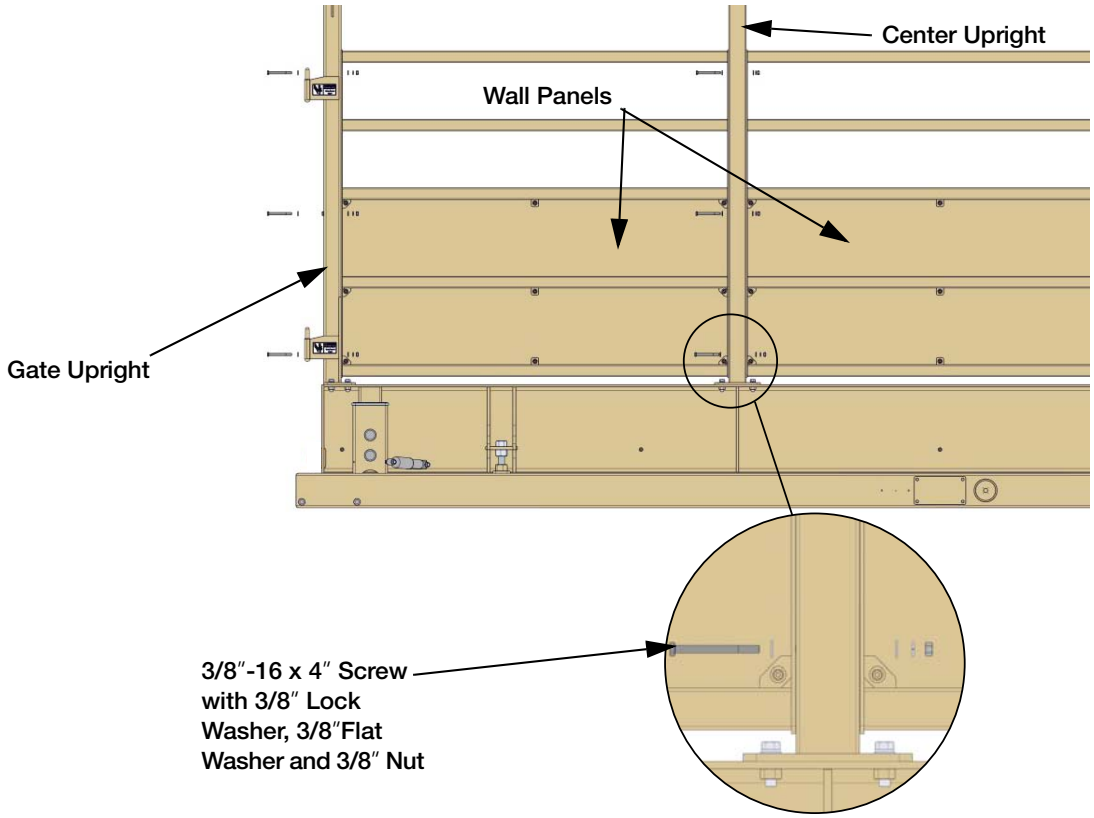

Figure 2-3. Install Wall Panels

6. Align top hinge section on gate with lower hinge section on upright and lower gate onto the bottom hinge section.

Important ***The latch should line up with the strike plate welded to the end upright. If it doesn't line up, washers are supplied to adjust the gate. Remove gate from hinges and place washers on the upright hinge, then reinstall the gate. Use washers as needed to align the latch to the striker plate.***

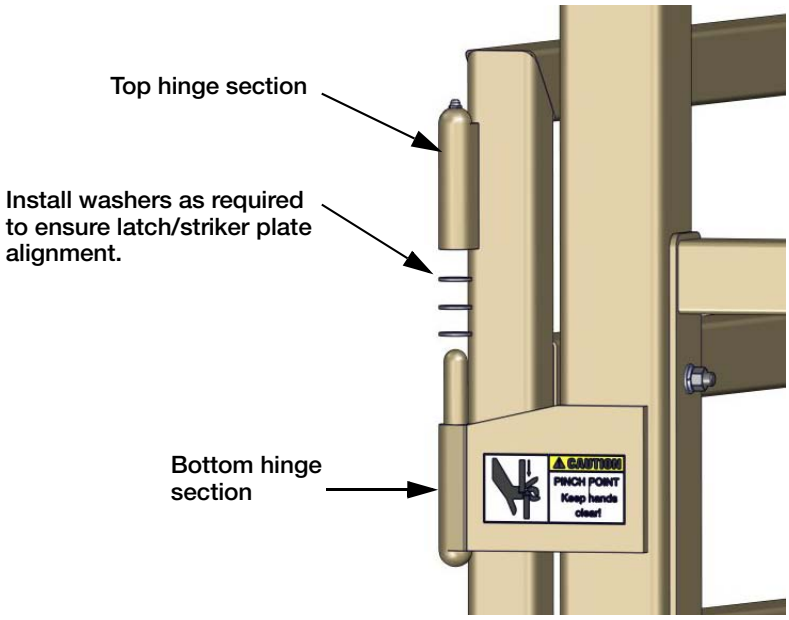

Figure 2-4. Gate Installation and Alignment

2.2 Load Cell Wiring and Connections

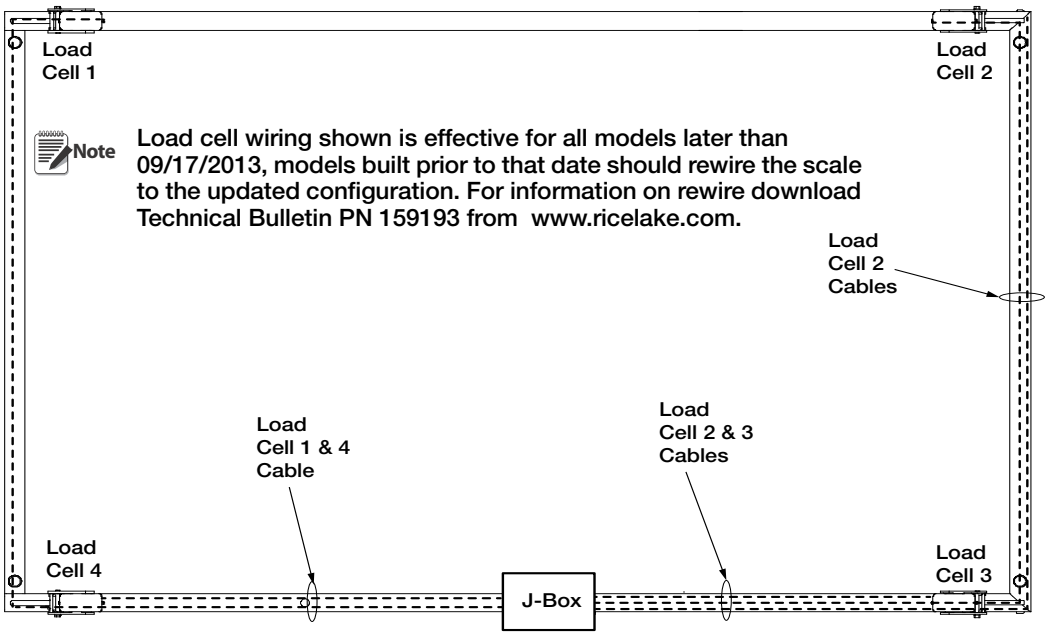

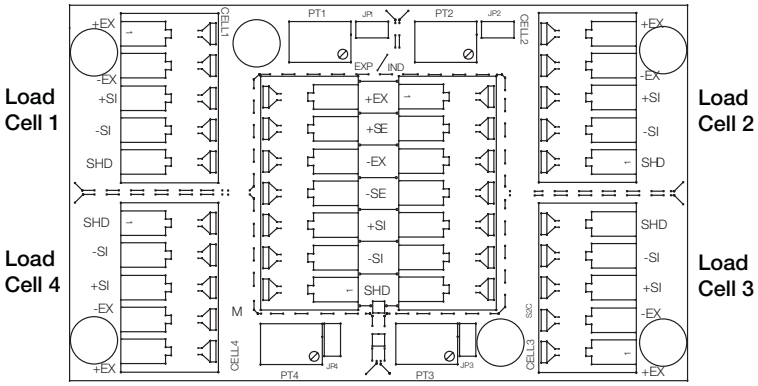

Figure 2-5. Load Cell Wiring Diagram

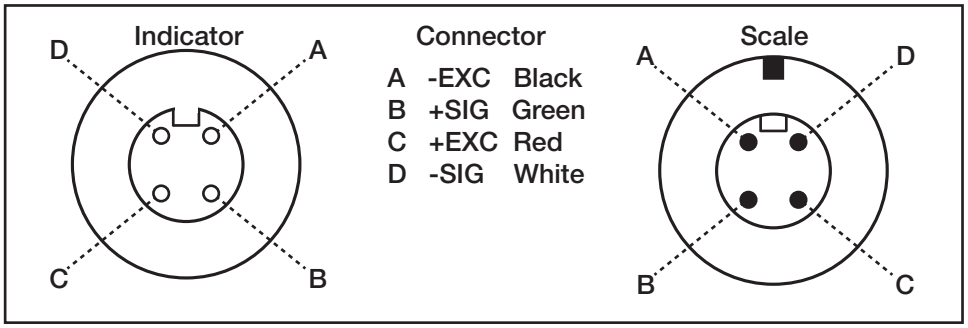

Figure 2-6. Indicator/Scale System Connections

Conn PN	Description	Used With	Cap PN	Cap Description
127259	Conn, MS Male Complete Kit	127260 or 127261	15731	Dust Plug, MS External THD
127260	Conn, MS Female Pin w/ Clamp	127259	15730	Dust Cap, MS INTL THD

Table 2-1. Weighcenter Connector and Plug Configurations

3.0 Repair Parts

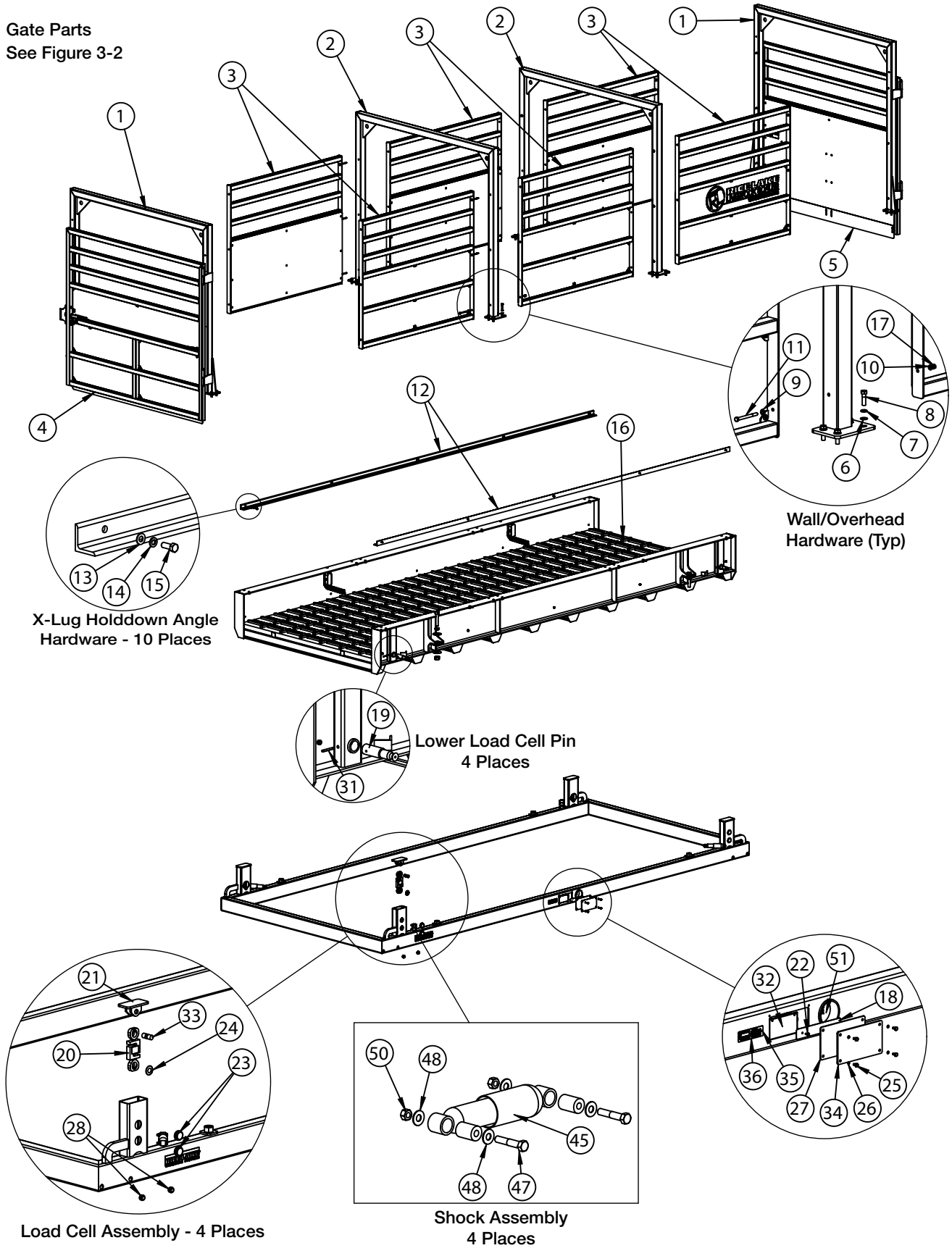

Figure 3-1. MAS-LC Scale Repair Parts Illustration

Item #	Part No	Description
1	151192	End Overhead, 7' LC/LM
	154680	End Overhead,10' LC/LM
2	151169	Internal Overhead, 7'
	154678	Internal Overhead, 10'
3	151174	Wall Segment 18 x 7 (13' - Qty 4 / 19' - Qty 6)
	151176	Panel, 18 x 7 for 151174
	154095	Wall Segment LC AG (15' - Qty 4 / 22' - Qty 6)
	154097	Panel, 20 x 7 for 154095
	155821	Wall Segment LC AG (17' - Qty 4)
	155823	Panel, 17 x 8 for 155821
4	151190 154682	Gate Assembly, LH 7' (includes item #1) Gate Assembly, LH 10' (includes item #1) See Figure 3-2 for Gate Parts
5	151194 154681	Gate Assembly, RH 7' (includes item #1) Gate Assembly, RH 10' (includes item #1) See Figure 3-2 for Gate Parts
6	15173	Washer, Plain 1/2" Type B
7	15167	Washer, Lock 1/2" Regular
8	121483	Bolt, Cap 1/2-13NC x 1 3/4"
9	81427	Washer, Plain 3/8" Type A
10	15147	Washer, Lock 1/4" Regular
11	132917	Carriage Bolt, 1/4-20x1 Zinc Plated
12	155750	Angle, X-Lug hold-down (13')
	154140	Angle, X-Lug hold-down (15')
	155820	Angle, X-Lug hold-down (17')
	151296	Angle, X-Lug hold-down (19')
	154117	Angle, X-Lug hold-down (22')
14	111736	Washer, Lock 3/8" Regular
13	111737	Washer, Plain 3/8" Type A
15	151352	Bolt, 3/8-16NC x 1" HEX
16	151307	Flooring, X-Lug Rough 7'
	154676	Flooring, X-Lug Rough 9'
	166440	Flooring, X-Plank 7'
	166441	Flooring, X-Plank 9'

Item #	Part No	Description
17	14641	Nut, Hex 1/4-20NC
18	131885	Mount Plate, J-Box
19	153941	Lower Cell Pin
20	127673	Load Cell Assy, OBW 10K, 20' cable
	167452	Load Cell Assy, OBW 10K, 40' cable *(used on load cell #1 22 x 8 and 22 x 10 only)*
21	153943	Mount, Upper Cell Pin
22	121129	Screw, Mach 10-32NC
	14633	Nut, Lock 10-32NF Hex
23	126789	Plug,Plastic for Round
24	127668	Retainer, Lower Load Cell
25	127007	Screw, Cap 1/4-20 x 1/2"
26	15147	Washer, Lock 1/4" Regular
27	126819	Gasket, Foam 1/8" Thick
28	126788	Plug, Plastic for Round
31	126926	Pin, 1/4" x 2 1/4" Slotted
32	88956	J-Box, JB4SS 4 Channel
33	153940	Upper Cell Pin
34	127740	Cover, Frame Plate MAS
35	14906	Screw, Drive NO 4 x 3/8"
36	16863	Label, Scale Base
45	128626	Damper ASSY
47	22093	Screw, Cap 3/8-16NC x 2" Hex
48	15161	Washer, Plain STD 3/8" SST
50	126992	Nut, 3/8-16 18-8 SST
51	158143	Homerun Cable
	127261	Connector
	15730	Dustcap
NS	131374	Paint, Grey Beige Aerosol

Table 3-1. MAS-LC Scale Repair Parts List

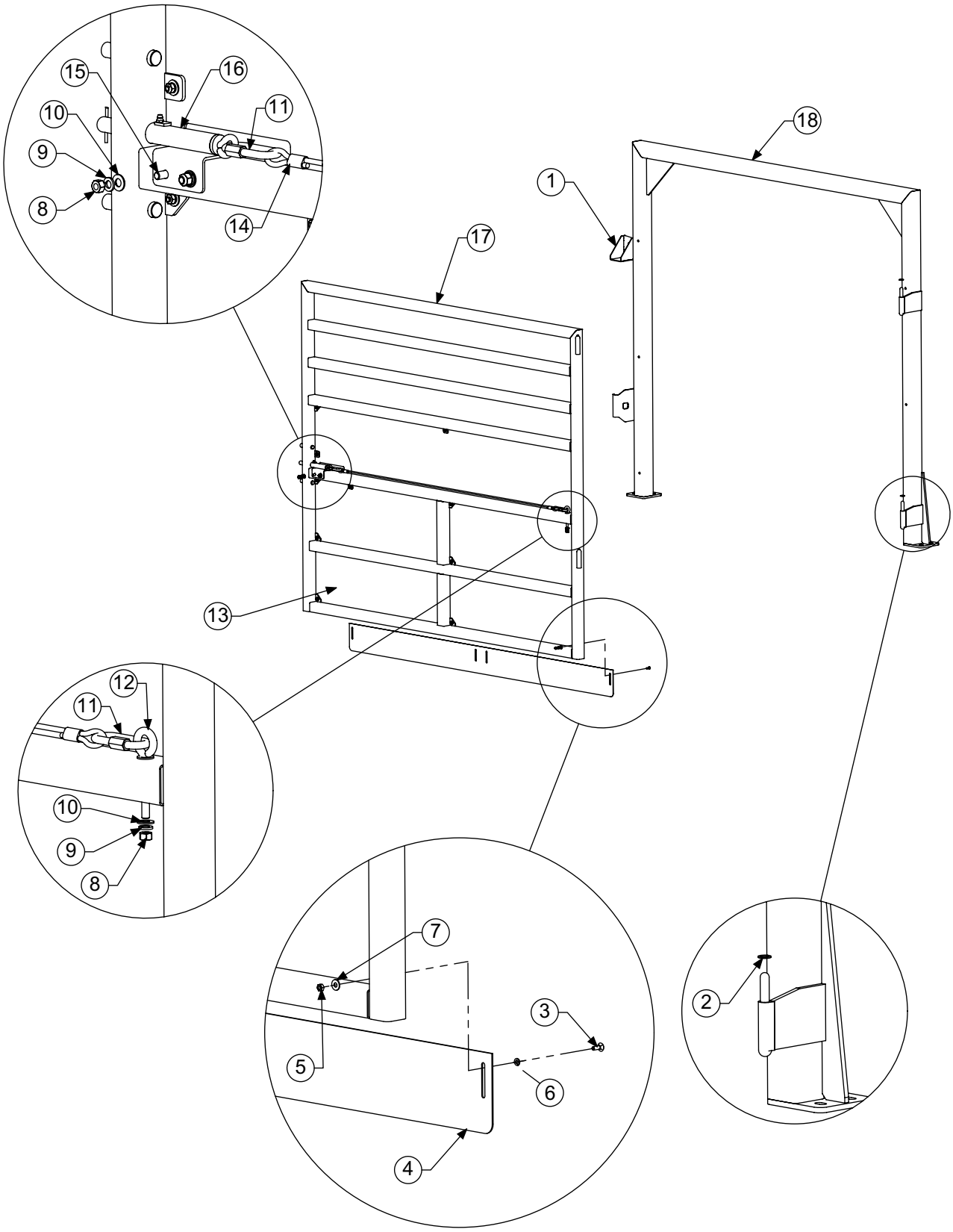

Figure 3-2. MAS-LC Repair Parts Illustration – End Gates

Item #	Part No	Description
1	164363	Bracket, Gate Lift Stop
2	151209	Washer, Plain .906 OD
3	132917	Carriage Bolt, 1/4-20 x 1"
4	159783	Kick Panel, LC and LM 7'
	164153	Kick Panel, LC and LM 9'
5	14641	Nut,1/4-20NC HEX Steel
6	15147	Washer, Lock 1/4" Regular
7	81427	Washer, Flat 1/4" Steel
8	132684	Nut,Hex 3/8-16NC GR5 Zin
9	15159	Washer, Lock 3/8" Regular
10	21938	Washer,Plain 3/8" Type A
11	150715	Link,Quick 3/8"
12	150820	Eye Bolt, 3/8-16NC x 3"
13	151193	Panel, Gate, 7', LC/LM
	154689	Panel, Gate, 9', LC/LM
14	150716	Cable,Latch 1/4" OD, 7'
	154690	Cable,Latch 1/4" OD, 9'
15	127013	Screw,Cap Hex 3/8-16 x 3"
16	141394	Gate Latch Assembly, MAS-LC
	131702	Gate Latch Spring
	160302	Hairpin, 0.08 x 1 9/16
17	151191	Gate, LH No Panel 7'
	154687	Gate, LH No Panel 10'
	151195	Gate, RH No Panel 7'
	154686	Gate, RH No Panel 10'
18	151192	End, Overhead 7’ LC/LM
	154680	End, Overhead 10’ LC/LM

Table 3-2. MAS-LC Repair Parts List – End Gates

4.0 Maintenance

4.1 Maintenance Schedule

Weekly

1. Check entire scale for buildup of debris. Remove any debris found on, under or around the scale.
2. Check for dirt and debris in the load cell stands and clean accordingly.
3. Check all external cables and conduit for damage.

Monthly

Grease hinges and latch assembly.

4.2 Scale Maintenance Procedures

Cleaning Load Cell Stands

It is very important to keep any excess debris from building up in the load cell stand. Lift scale, block it up, and clean any dirt out of the load cell stands through the drain holes located at the bottom of the stand.

4.3 Replace Flooring

1. Remove the hold down angle on both side of the floor by loosening the bolts.
2. Remove section(s) of flooring that are to be replaced.
3. Install new flooring.
4. Reinstall the hold down angles.

Replace Load Cell/Clean Load Cell

This is very important to ensure the long life of your unit. Use the parts list drawings for item numbers.

Important *Avoid bending or twisting the load cell wires.*

1. Install overload bolts to release tension on load cells.

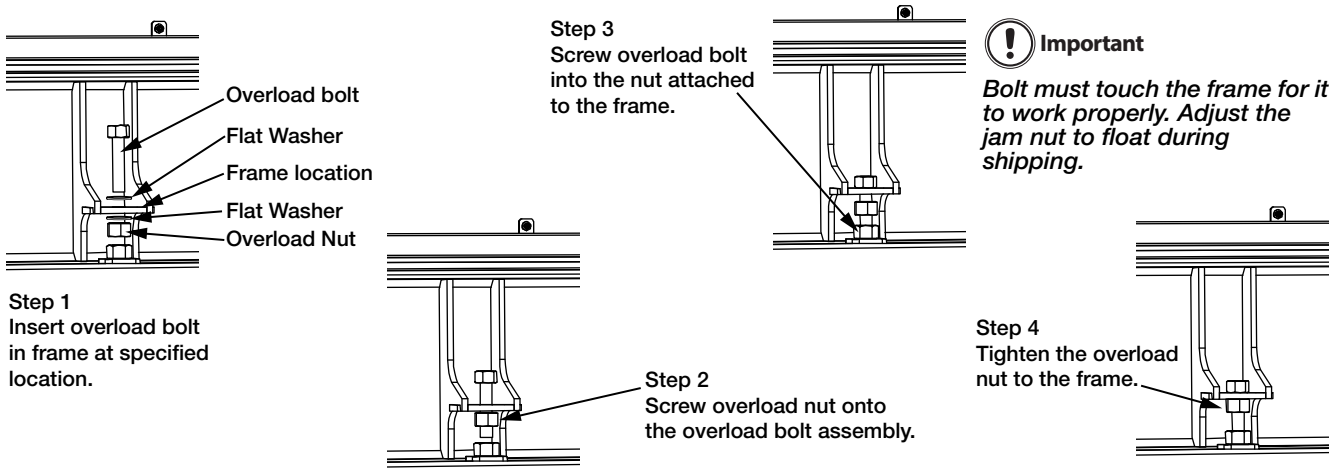

Figure 4-1. Overload Bolt Assembly Installation

2. Remove the plastic plugs.
3. Remove the load cell retainer.
4. Pull load cell away from the lower load cell pin and pull load cell stand cover and load cell assembly up and out of the load cell stand.
5. Remove the upper load cell pin to release the load cell from the load cell stand cover.
6. Reassemble with new load cell by reversing the steps above.

Note ***Save the overload components for use with future cleanings.***

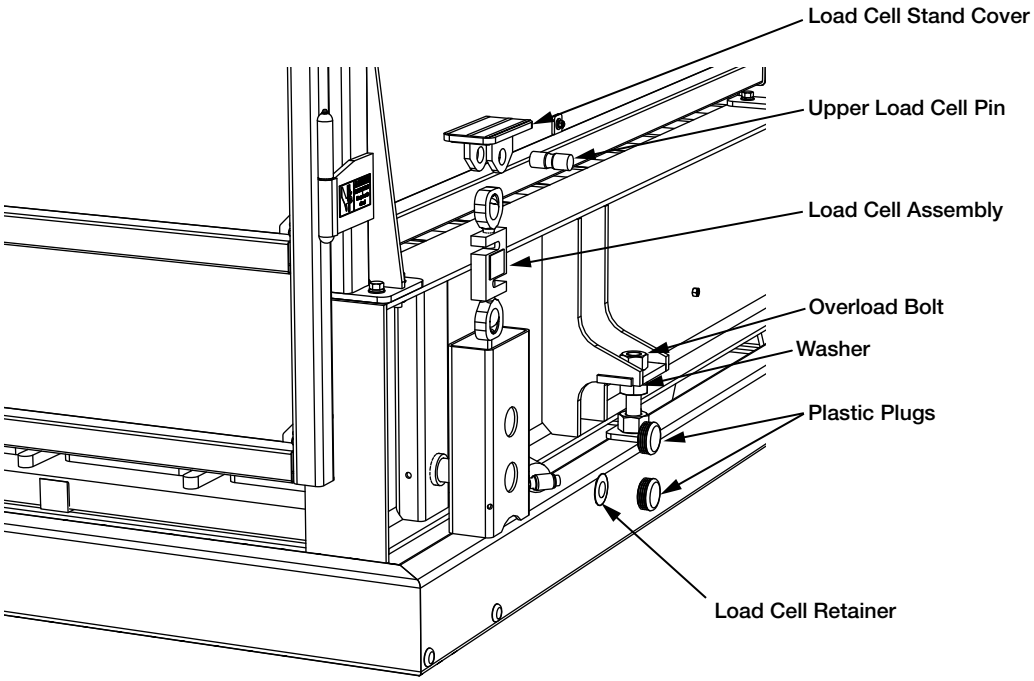

Figure 4-2. Load Cell Disassembly and Greasing

Important ***Load cell stand cover must fit squarely into the load cell stand before removing the overload bolt assemblies. See Section 2.1.1.***

4.4 Troubleshooting

Symptom	Probable Cause	Action
The weight reading on the indicator is unstable.	The circuit board in the control panel may be wet or the junction box for the load cells may have moisture.	Dry any areas that are contaminated with moisture. Check for leaks and reseal.
	A load cell cable may be pinched or damaged.	Contact RLWS or a qualified dealer for support. Cutting the load cell cable will void the warranty. Special repair techniques are required.
The scale has a positive error when loading or a negative error when unloading.	Mechanical binding problem on scale	Check for debris around or under the scale. Check each load cell location for foreign material. Check all items that run from on the scale to off the scale. Check all gates or gathering panels for contact.
The scale has a negative error when loading or a positive error when unloading.	Moisture is present somewhere in the electrical system.	Dry any areas that are contaminated with moisture. Check for leaks and reseal.
Scale will not ZERO.	Weight on scale larger than the allowable ZERO window.	Clean the scale deck of debris, then Zero the scale.
		Zero Window parameter set incorrectly.
System does not operate-no display	Power disconnected.	Check and reconnect.
	Indicator fuse blown.	Replace fuse. Check for cause.
	Interface cable cut or disconnected.	Repair.
	Signal leads incorrectly installed at indicator.	Install according to indicator installation manual.
Display stays at zero.	Indicator faulty.	Service indicator.
	Load cell connections faulty.	Check cable connections in junction box and at indicator.
Erratic weights	Vibration near scale.	Remove source of vibration (or remove scale).
	Platform not level within 1/4 inch.	Level scale by adjusting feet or shimming if necessary.
	Load cell or cable water damage.	Replace.
	Debris under load cells or platform.	Clean.
	Indicator faulty.	Use simulator to test indicator for stability. Service indicator.
Consistently high or low weights	Indicator not properly adjusted to zero.	Zero the indicator according to indicator manual.
	Platform binding.	Obtain adequate clearance for free platform movement.
	Indicator not calibrated.	Calibrate according to indicator manual.
	Feet touching deck underside.	Adjust feet downward to provide clearance.

Important ***If a problem with the scale is suspected, contact Rice Lake Weighing Systems or a qualified local scale dealer.***

The space between the platform side, weigh bridge and frame, and the surface beneath the platform must be periodically cleaned to prevent debris build up. More frequent cleaning of these areas is necessary with scales mounted in pits.

4.5 Specifications

	MAS-LC 13 x 8	MAS-LC 15 x 8	MAS-LC 17 x 8	MAS-LC 19 x 8	MAS-LC 22 x 8	MAS-LC 22 x 10
Overall Length	153 in	176 in	200 in	224 in	268.5 in	258.5 in
Deck Length	145 in	168 in	192 in	216 in	250.5 in	250.5 in
Overall Width	101 in	101 in	101 in	101 in	101 in	131 in
Deck Width	78 in	78 in	78 in	78 in	78 in	108 in
Deck Height	8 in	8 in	8 in	8 in	8 in	8 in
Height	97 in	97 in	97 in	97 in	97 in	97 in
Weight	4540 lb	4920 lb	5420 lb	6250 lb	6660 lb	7900 lb
Capacity	20000 lb	20000 lb	20000 lb	20000 lb	20000 lb	20000 lb
Section Cap	20000 lb	20000 lb	20000 lb	20000 lb	20000 lb	20000 lb
Approval Class	IIIL(IIIHD)	IIIL(IIIHD)	IIIL(IIIHD)	IIIL(IIIHD)	IIIL(IIIHD)	IIIL(IIIHD)
Approvals	NTEP 99-091		Measurement Canada Approved AM4847			
Grad Size	5 lb (2 kg)	5 lb (2 kg)	5 lb (2 kg)	5 lb (2 kg)	5 lb (2 kg)	5 lb (2 kg)
Paint	Powder Coated Steel					
Structural Steel is not galvanized.						

Notes:

Size / Model # _____

Serial # _____

Date Purchased _____

Unit ID # _____

Rice Lake Stationary Livestock Scale Limited Warranty

Rice Lake Weighing Systems (RLWS) warrants that all RLWS equipment and systems properly installed by a Distributor or Original Equipment Manufacturer (OEM) will operate per written specifications as confirmed by the Distributor/OEM and accepted by RLWS. All systems and components are warranted against defects in materials and workmanship for two years.

RLWS warrants that the equipment sold hereunder will conform to the current written specifications authorized by RLWS. RLWS warrants the equipment against faulty workmanship and defective materials. If any equipment fails to conform to these warranties, RLWS will, at its option, repair or replace such goods returned within the warranty period subject to the following conditions:

- Upon discovery by Buyer of such nonconformity, RLWS will be given prompt written notice with a detailed explanation of the alleged deficiencies.
- Individual electronic components returned to RLWS for warranty purposes must be packaged to prevent electrostatic discharge (ESD) damage in shipment. Packaging requirements are listed in a publication, *Protecting Your Components From Static Damage in Shipment*, available from RLWS Equipment Return Department.
- Examination of such equipment by RLWS confirms that the nonconformity actually exists, and was not caused by accident, misuse, neglect, alteration, improper installation, improper repair or improper testing; RLWS shall be the sole judge of all alleged non-conformities.
- Such equipment has not been modified, altered, or changed by any person other than RLWS or its duly authorized repair agents.
- RLWS will have a reasonable time to repair or replace the defective equipment. Buyer is responsible for shipping charges both ways.
- In no event will RLWS be responsible for travel time or on-location repairs, including assembly or disassembly of equipment, nor will RLWS be liable for the cost of any repairs made by others.

THESE WARRANTIES EXCLUDE ALL OTHER WARRANTIES, EXPRESSED OR IMPLIED, INCLUDING WITHOUT LIMITATION WARRANTIES OF MERCHANTABILITY OR FITNESS FOR A PARTICULAR PURPOSE. NEITHER RLWS NOR DISTRIBUTOR WILL, IN ANY EVENT, BE LIABLE FOR INCIDENTAL OR CONSEQUENTIAL DAMAGES.

RLWS AND BUYER AGREE THAT RLWS' SOLE AND EXCLUSIVE LIABILITY HEREUNDER IS LIMITED TO REPAIR OR REPLACEMENT OF SUCH GOODS. IN ACCEPTING THIS WARRANTY, THE BUYER WAIVES ANY AND ALL OTHER CLAIMS TO WARRANTY.

SHOULD THE SELLER BE OTHER THAN RLWS, THE BUYER AGREES TO LOOK ONLY TO THE SELLER FOR WARRANTY CLAIMS.

NO TERMS, CONDITIONS, UNDERSTANDING, OR AGREEMENTS PURPORTING TO MODIFY THE TERMS OF THIS WARRANTY SHALL HAVE ANY LEGAL EFFECT UNLESS MADE IN WRITING AND SIGNED BY A CORPORATE OFFICER OF RLWS AND THE BUYER.

RICE LAKE WEIGHING SYSTEMS • 230 WEST COLEMAN STREET • RICE LAKE, WISCONSIN 54868 • USA